Waterproof IP67
IOA High current

Various heads/Silver-plated pins | Normally open + Normally closed

Ring illuminated

Flat round

Ring illuminated and power symbol

Bright LED

Waterproof IP67

10A

Multiple color options

Wide voltage
6-48V/220V

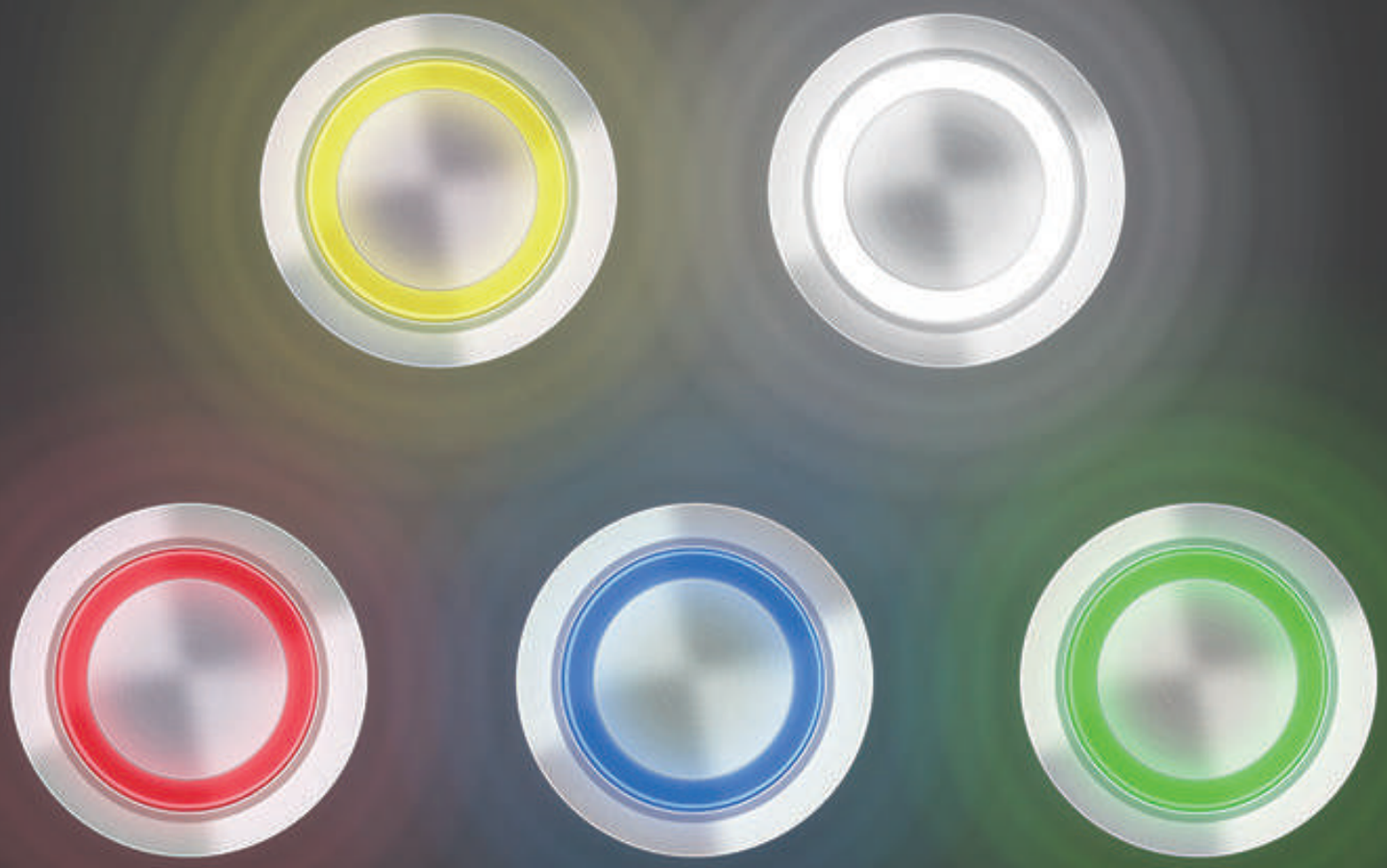

Note: Tri-color (RGB) does not support 220V!

Press to change color to increase indication

Additional indication function

High current+Long life

10A High current

【Mounting hole 22mm high current series, adopting high standard and high configuration,high current and long life】

Electrical life

Mechanical life

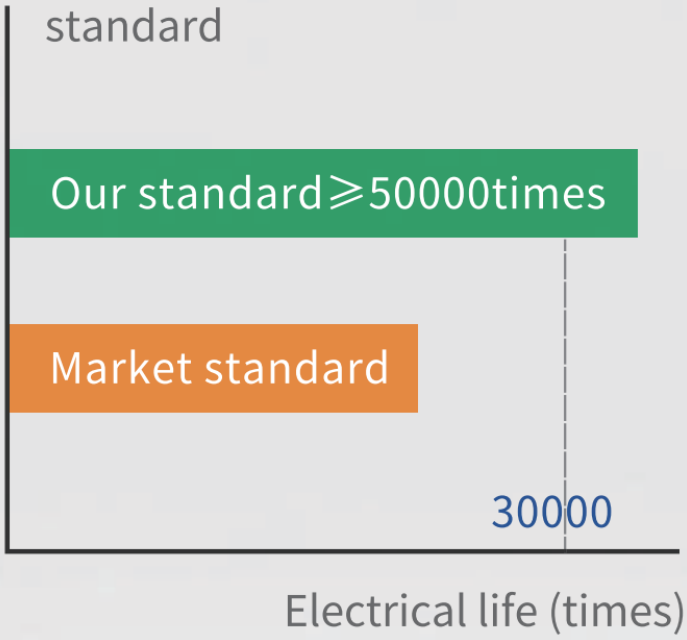

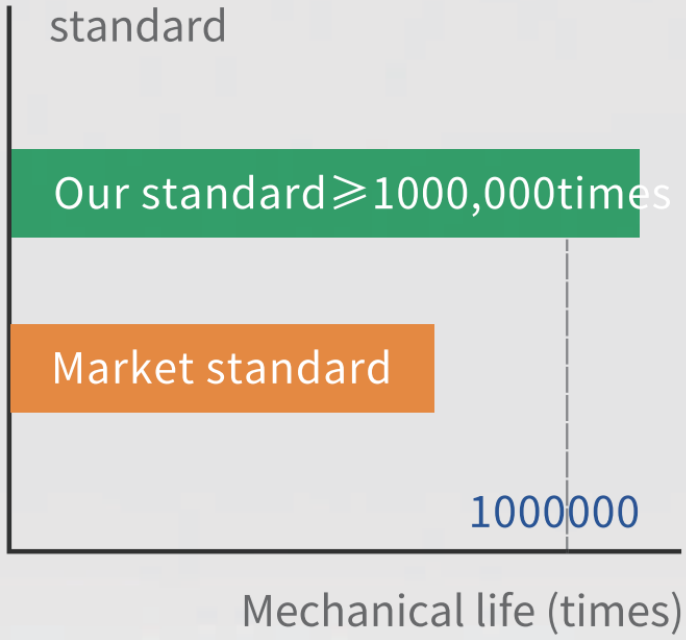

working environment

-25°C~+65°C

Good Material 01#

Environmental Protection

【The base is flame retardant (nylon glow-Wire ,nylon PA66) and high temperature resistant RoHS, Reach qualification】

FIRST FEATURE

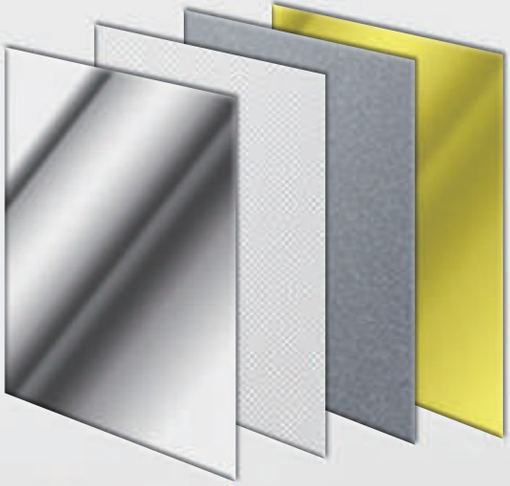

<Electroplating anticorrosive coating>

02#

More reliable waterproof feature design

【Built-in waterproof O-Ring on the button head, IP67 waterproof rating】 SECOND FEATURE

Bold thickening + silver plating

03#

【Strongly protect every current flow for you】

THE THIRD FEATURE

Matching connector for push button switches D-shaped positioning groove design

04#

【Positioning groove design with exclusive connector, free welding, fast and convenient】

FOURTH CHARACTERISTIC

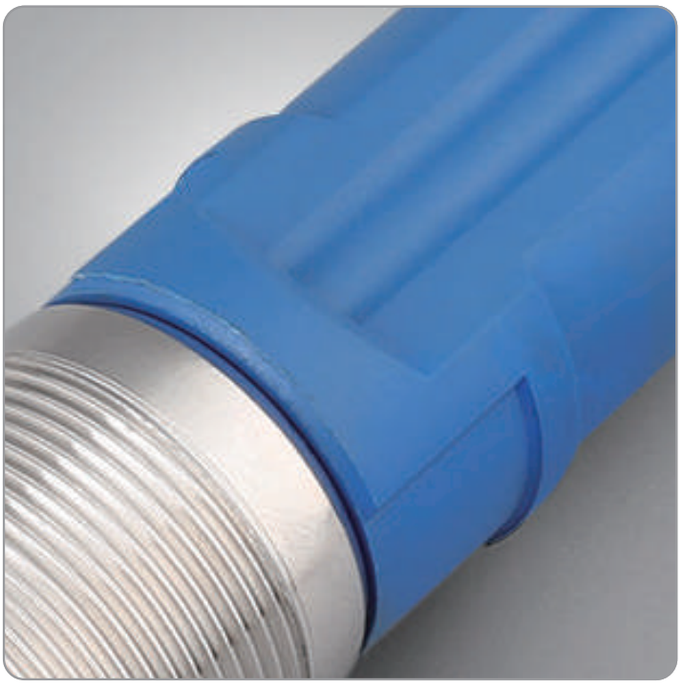

Send connectors for free

Strengthen the connection to prevent swing

05#

Three different heads

Flat/Ring illuminated/Ring illuminated and power symbol

【Use materials carefully and strictly to control from the source】

FIFTH FEATURE

Novel appearance 06#

【Independent research and development design, taking into account appearance and practical functions】

SIXTH FEATURE

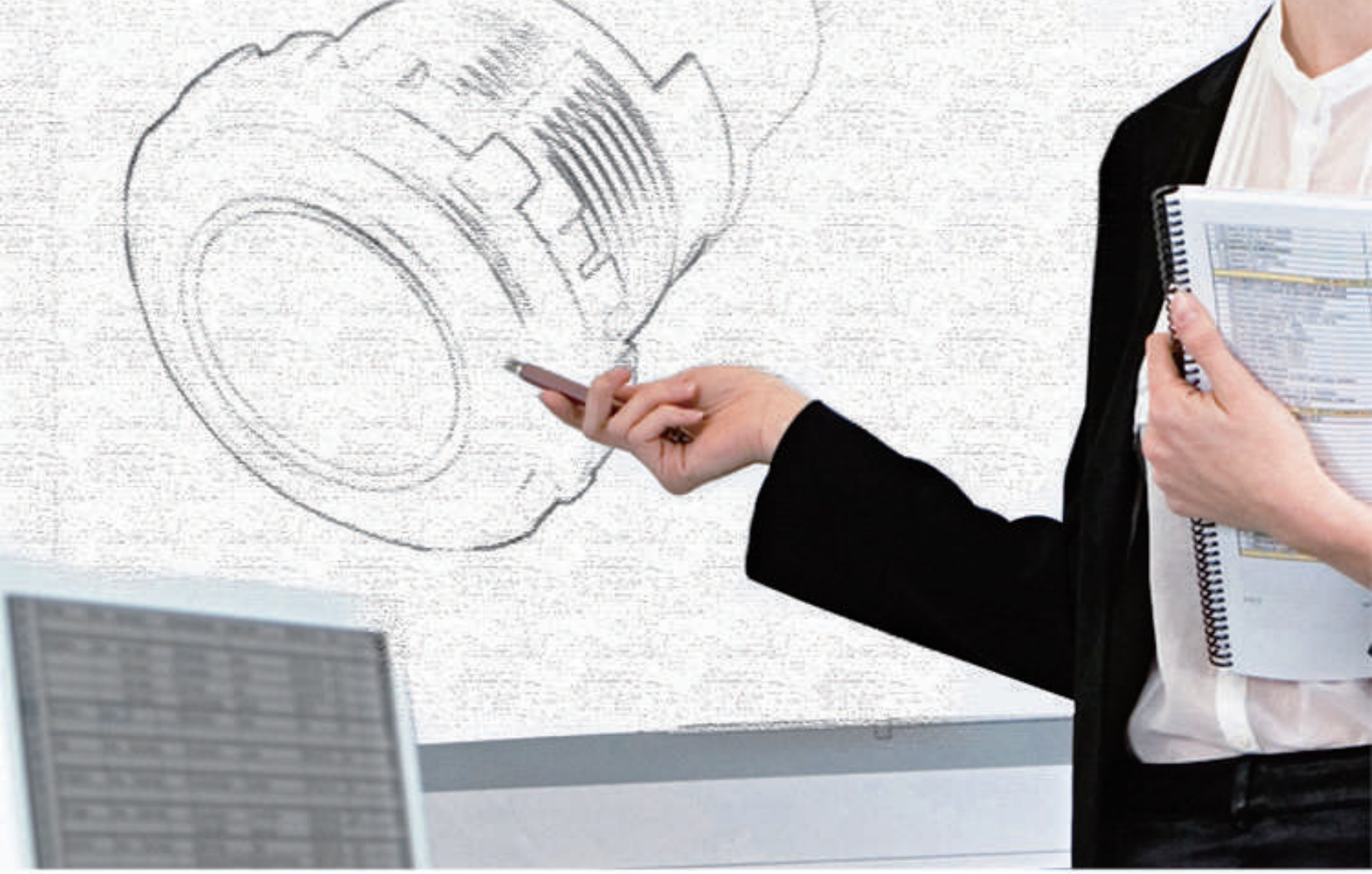

Product Size

Unit:mm

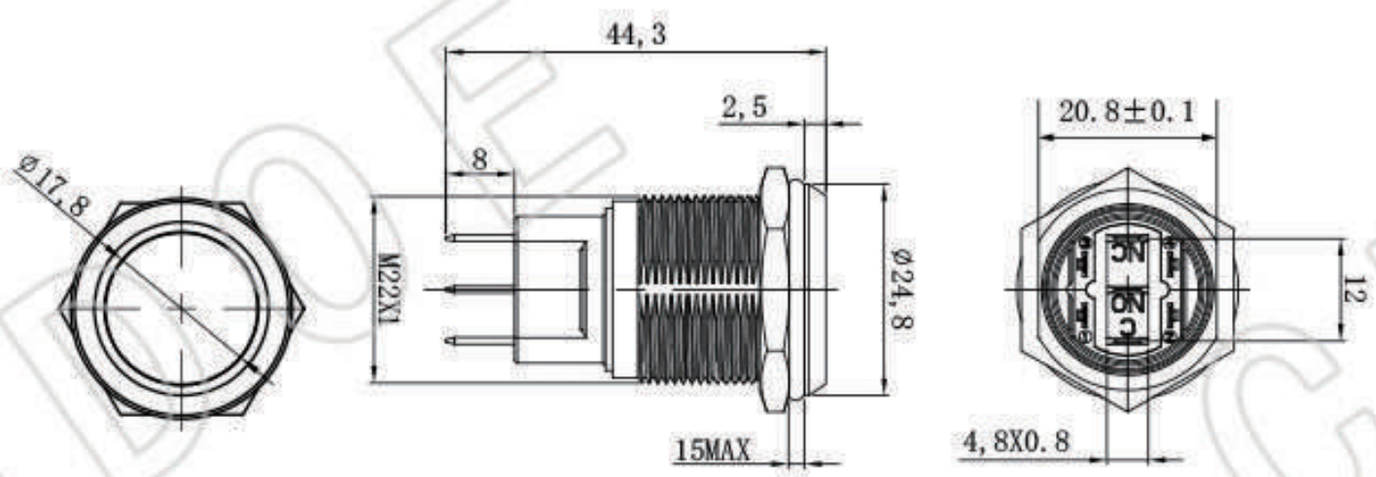

【Flat head push button without led】

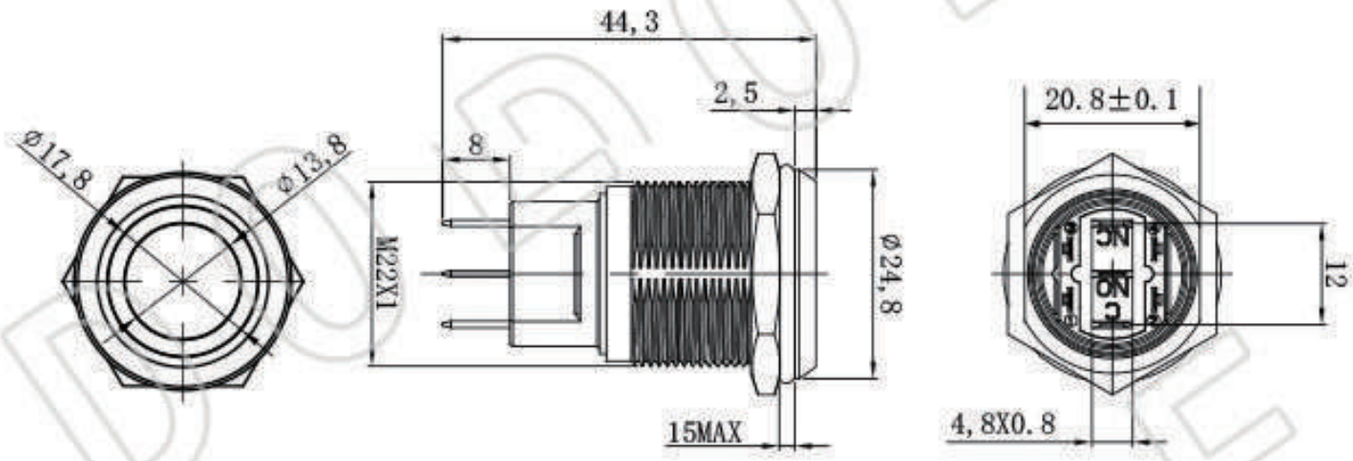

【Ring led push button switches】

Details are important

WIRING

Lamp common pins ①

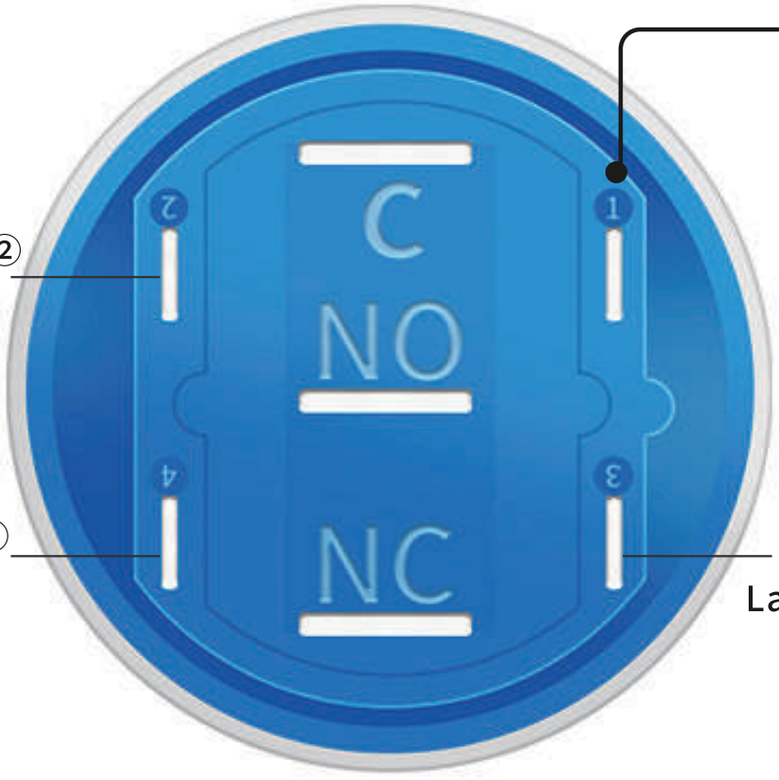

Lamp bead color pin②

Lamp bead color pin④

Lamp bead color pin③

Wiring reference
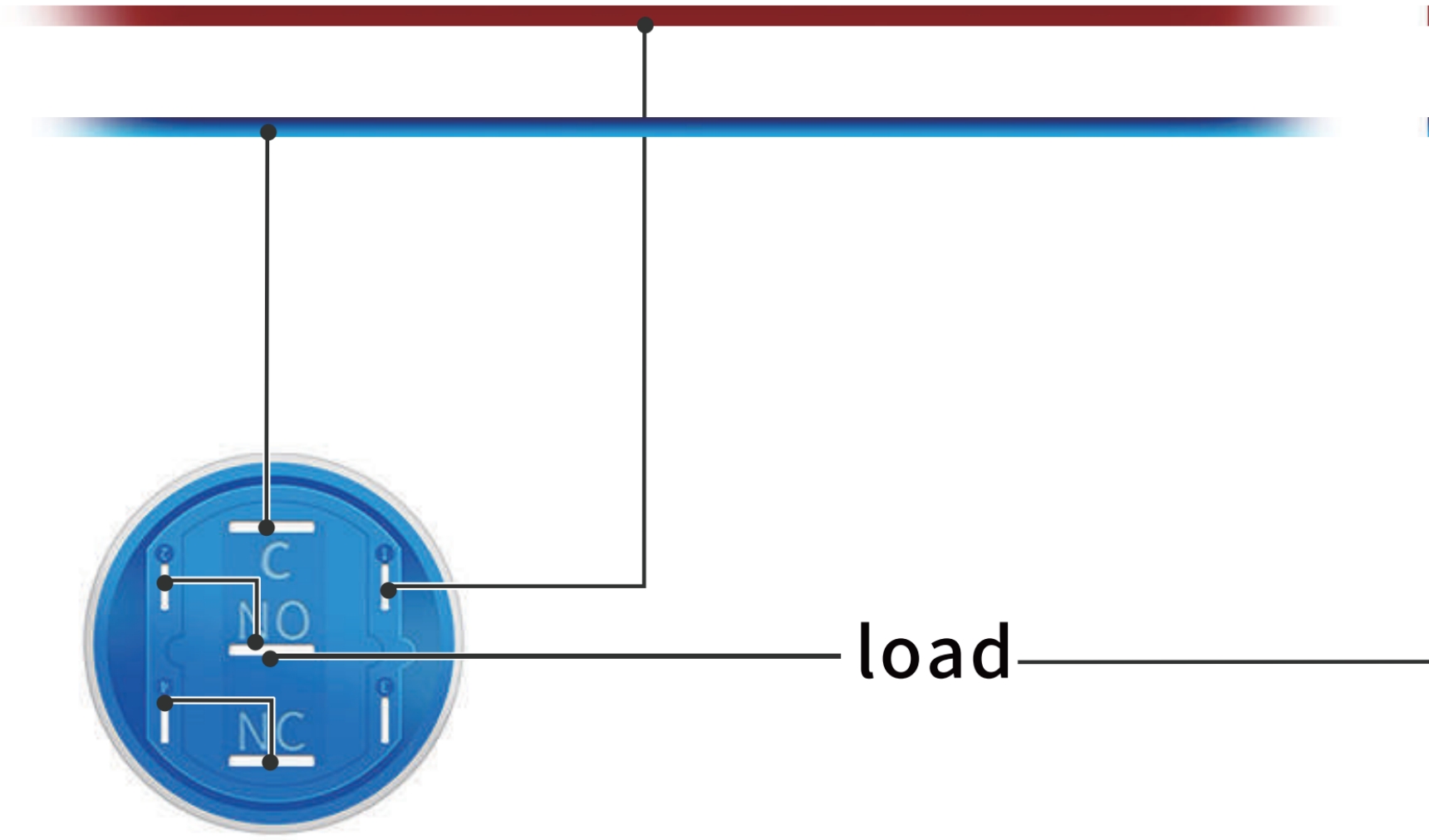
NO: Press the power button to change the color of LED